Space

1353_86923

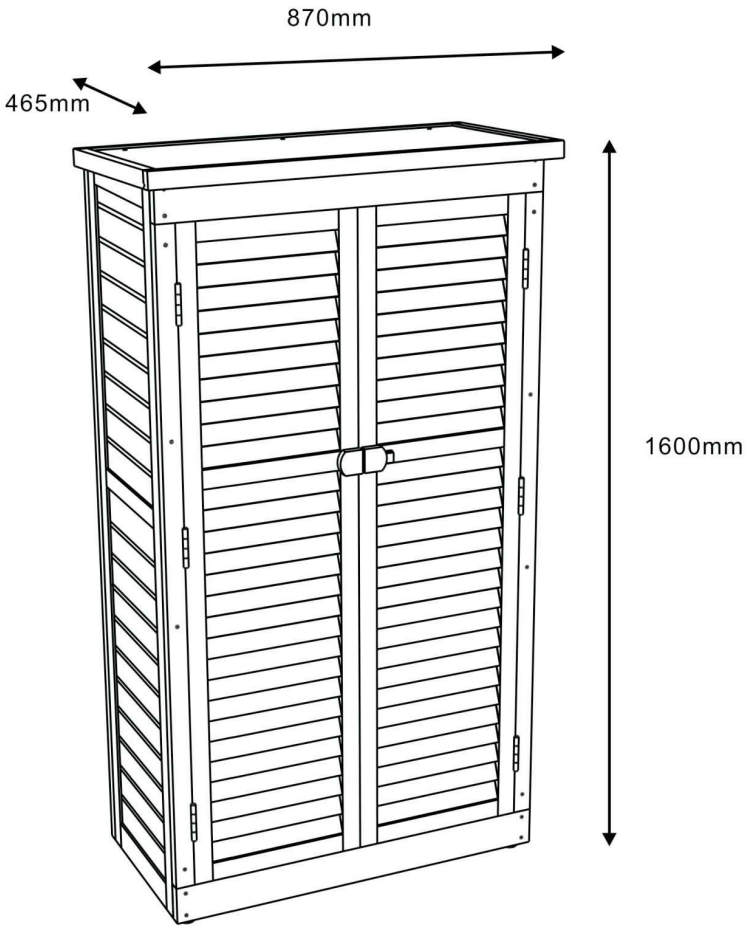

Habitat et Jardin

1353_86923				
A		3.5*40mm	x24	1/1
B		3.5*35mm	x16	1/1
①	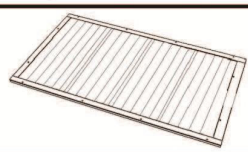	1524*825mm	x1	1/1
②	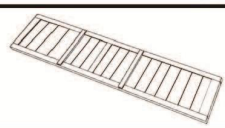	1553*380mm	x1	1/1
③	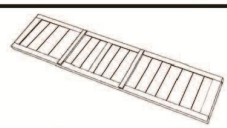	1553*380mm	x1	1/1
④	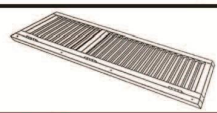	1427*410mm	x1	1/1
⑤		1427*410mm	x1	1/1
⑥	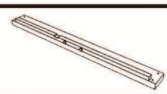	825*60mm	x1	1/1
⑦	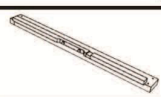	825*60mm	x1	1/1
⑧		1473*30mm	x1	1/1
⑨	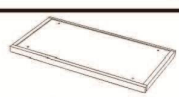	870*465mm	x1	1/1
⑩		782*378mm	x1	1/1
⑪	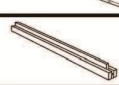	365*25mm	x2	1/1
⑫		500*52mm	x2	1/1
⑬	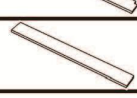	500*62mm	x10	1/1
⑭		276*52mm	x2	1/1
⑮		276*62mm	x10	1/1
⑯		165*14.5mm	x1	1/1
⑰		50*70mm	x1	1/1
⑱		50*70mm	x1	1/1
⑲			x4	1/1

FR : SAV/INFORMATION /VIDEO/CONTACT
EN: AFTER-SALES SERVICE/INFORMATION/VIDEO/CONTACT
DE : REPARATUR-SERVICE UND ERSATZTEILE /INFORMATIONEN /VIDEO/KONTAKT
ES: SERVICIO POST-VENTA/INFORMACIÓN/VIDEO/CONTACTO
IT: SERVIZIO ASSISTENZA/INFORMAZIONI/VIDEO/CONTATTO
PT: SERVIÇO PÓS-VENDA/INFORMAÇÕES/VIDEO/CONTATO
PL: SERWIS TECHNICZNY/INFORMACJE/WIDEO/KONTAKT
NE: AFTER SALES SERVICE/INFORMATIE/VIDEO/CONTACT
HE: חר שירות ומכירות/מידע /הווידאו/לתקשר עם

SAV.HABITATETJARDIN.COM

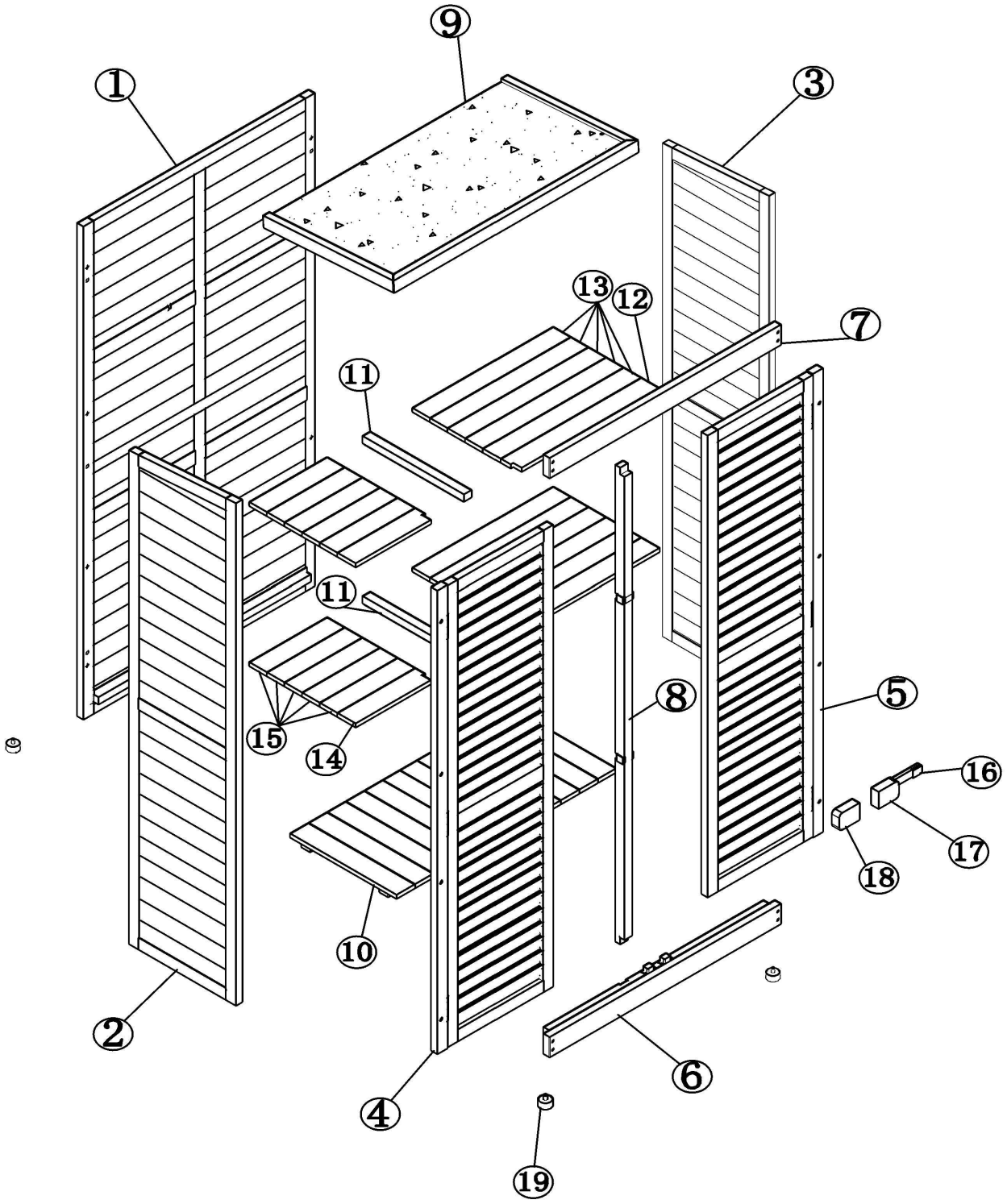
9
1
3
13
12
7
11
11
8
5
15
14
16
17
18
10
2
6
4
19

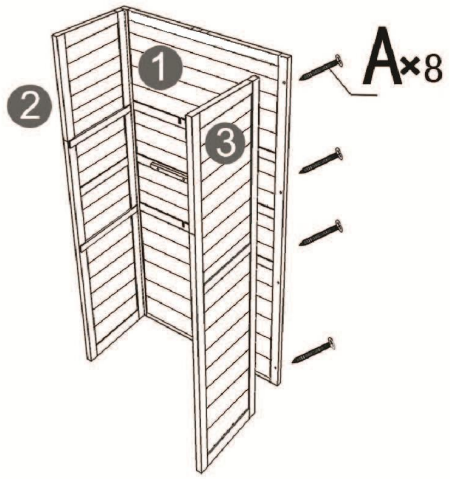

1

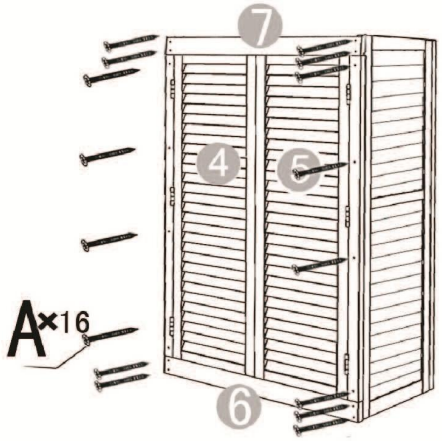

2

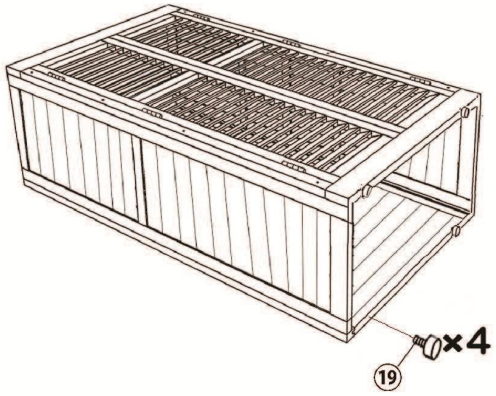

3

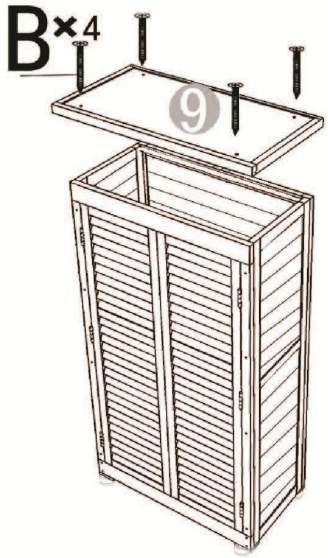

4

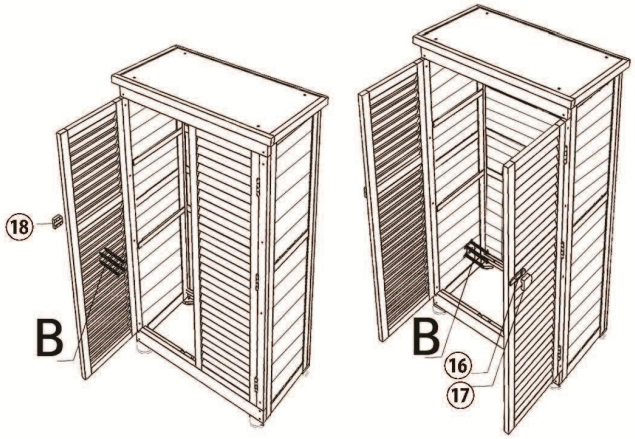

5

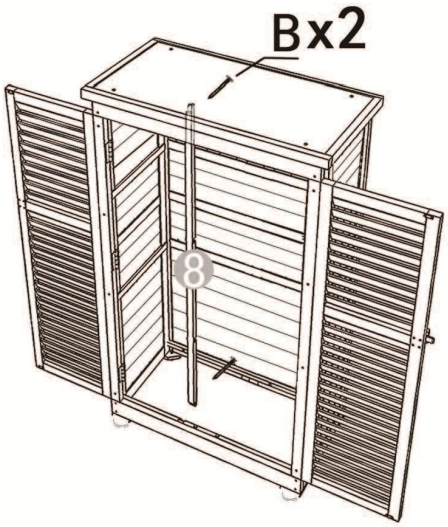

6

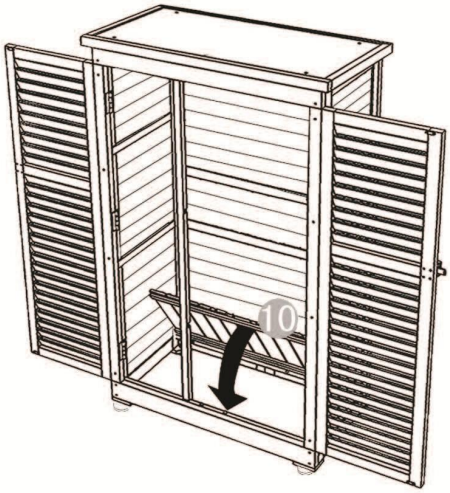

7

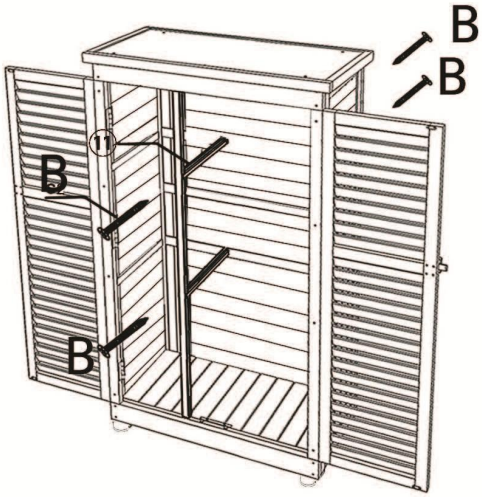

8

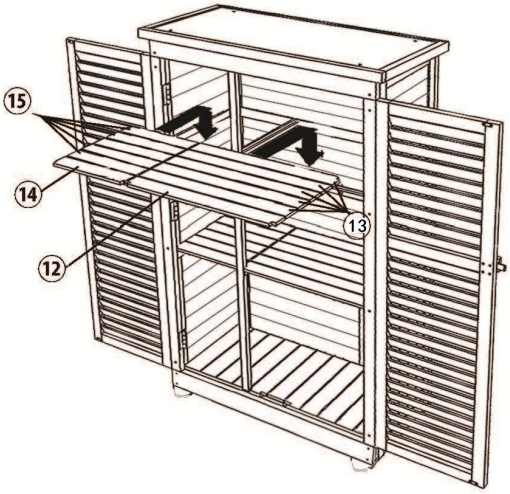

9

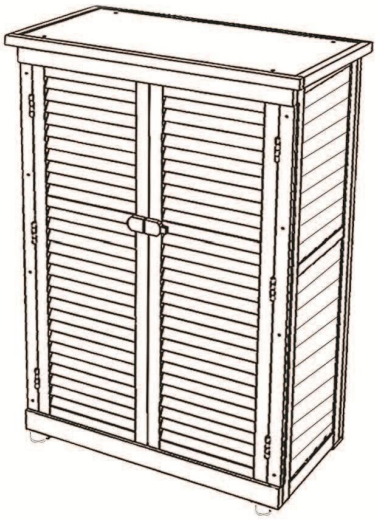

10